The Lagrange (L5) Remote-Sensing Package

Jackie Davies, RAL Space

Remote-Sensing Package Consortium Lead

RS Package

ESA ITT: AO/1-9006/17/DE/MRP : Lagrange Missions Phase A/B1 System Studies (funded through GSP and LGR)

ESA ITT: AO/1-9015/17/DE/MRP : Lagrange Missions In-situ Instruments Phase A/B1 Study & Pre-Developments

ESA ITT: AO/1-9014/17/DE/MR : Lagrange Missions Remote Sensing Instruments Phase A/B1 Study & Pre-Developments

Four RS instruments:

- **PMI** (Photospheric Magnetic Field Imager)
- **EUVI** (Extreme Ultra-Violet Imager)
- **COR** (CORonagraph)
- **HI** (Heliospheric Imager)

with a common* **IPCU** (Instrument Processing & Control Unit)

*PMI has its own DHU that interfaces into the IPCU

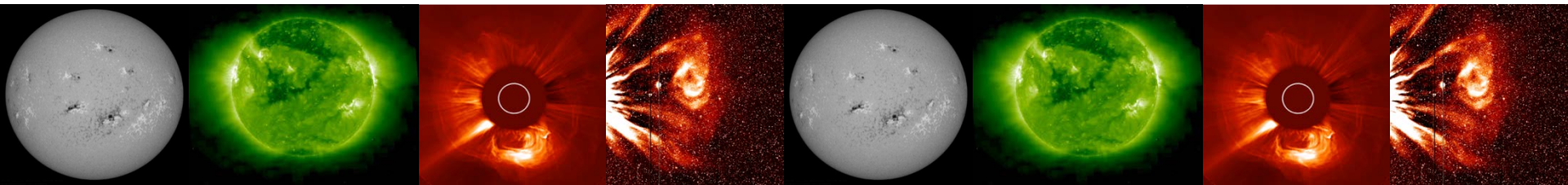

Consortium Roles

Role	Lead	Collaborator	Collaborator
Consortium lead	*RAL (Jackie Davies)*	–	–
PMI : Photospheric Magnetic Field Imager	*MPS*	*OHB*	–
EUVI : EUV Imager	*CSL/ROB*	*PMOD*	–
COR : Coronagraph	*RAL*	*UGOE*	–
HI : Heliospheric Imager	*RAL*	*UGOE*	–
IPU (Inst Proc Unit)	*ADS-Ge*	–	–
G&F Ops	*Deimos-UK*	*Deimos-Ro*	*RDA*
Customer requirements	*UK Met Office*	–	–

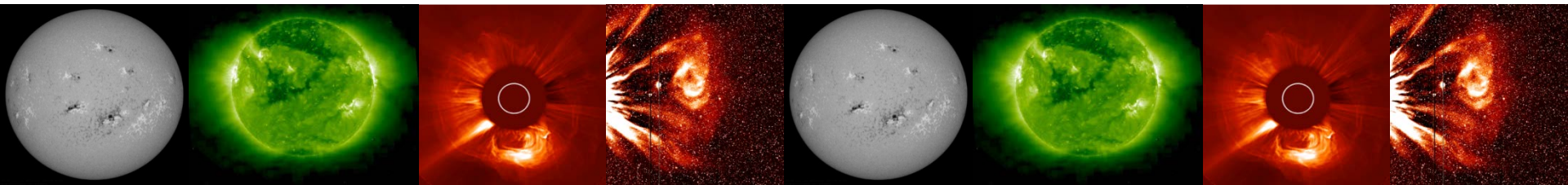

System block diagram

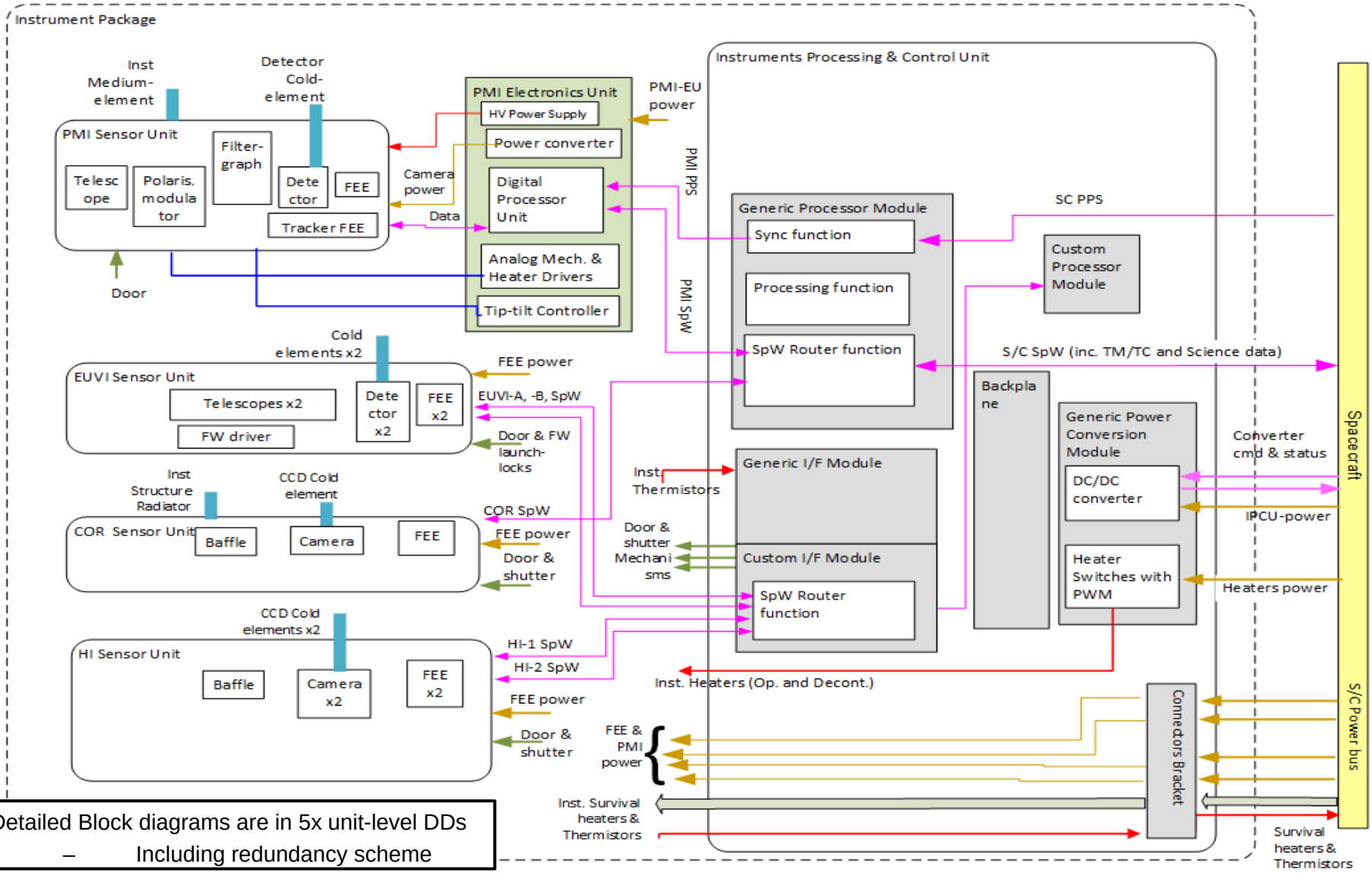

Detailed Block diagrams are in 5x unit-level DDs

– Including redundancy scheme

System block diagram

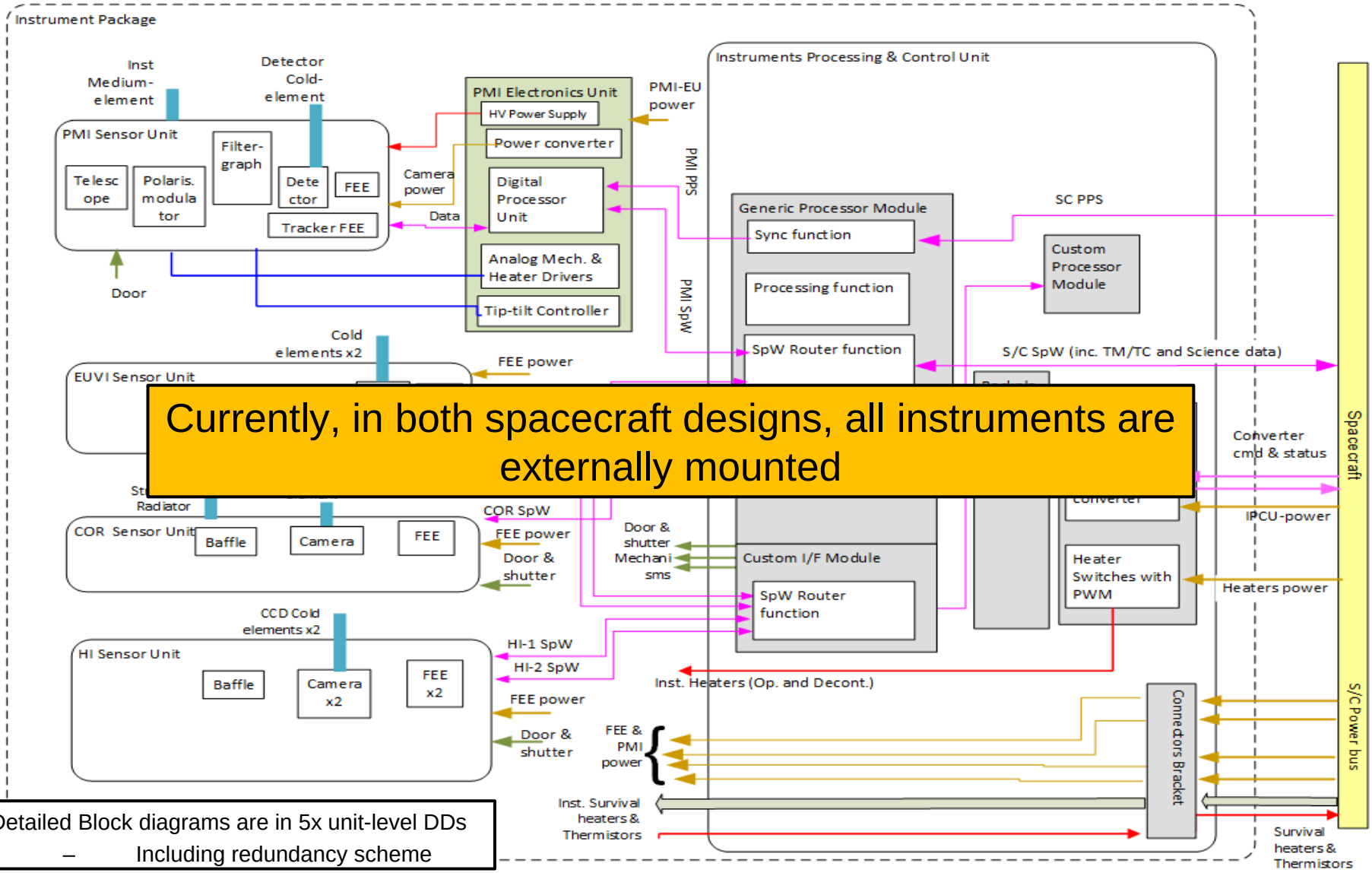

Detailed Block diagrams are in 5x unit-level DDs

– Including redundancy scheme

Instrument Overview : PMI

- Monitoring of magnetic activity on the Sun; input to modelling of background solar wind at predict CME arrival at Earth
- L5 view enables such monitoring of that part of the solar disk yet to rotate towards Earth (longer lead-time monitoring/improved background)
- Monitoring visible-light continuum (sunspot activity/complexity/development)

Observational parameters :

- Products : vector magnetograms (B, γ, φ), line-of-sight velocities (v_{LOS}), continuum mapping (I_c)
- FoV : full Sun + alignment margin
- Spatial resolution : 2.2 arcsec
- Cadence : 30 min
- Heritage : Solar Orbiter (PHI HRT)

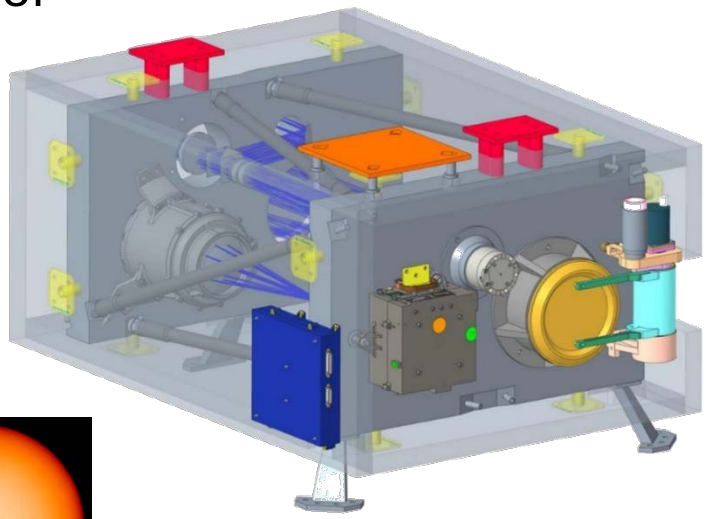

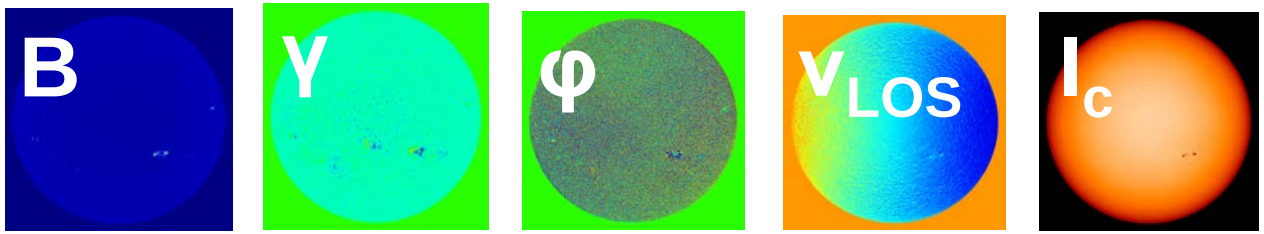

Instrument Overview : EUVI

- Monitoring structure and complexity of the solar atmosphere, and its evolution, including prominences, active regions and coronal holes
- L5 view enables such monitoring of the solar atmosphere on that part of the solar disk yet to rotate towards Earth

Observational parameters :

- Wavelength : single band FeXII 195Å [potential complimentary inst.]
- FoV : 42.6 x 61.3' extended towards Earth
- Spatial resolution : 1.6 arcsec
- Cadence : 2 – 3 min
- Heritage: PROBA-2 SWAP, GSTP ESIO

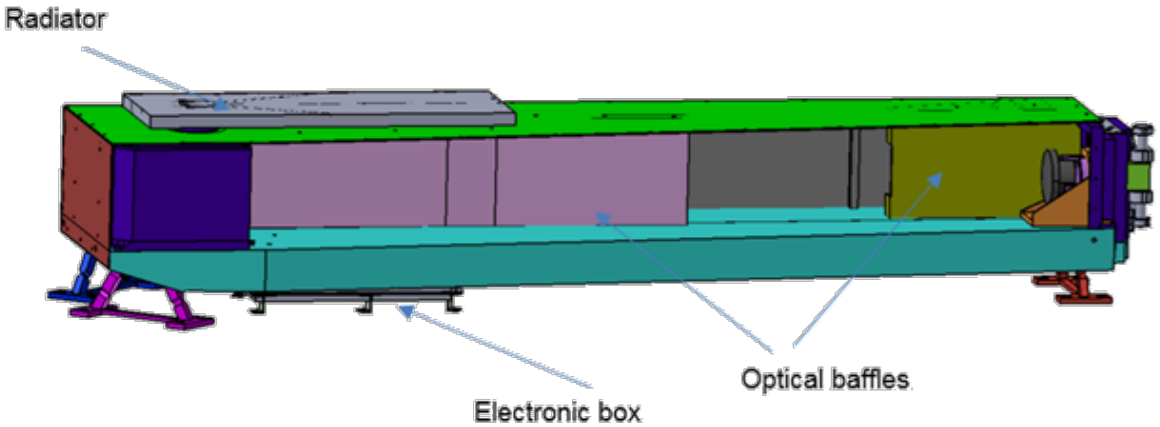

Instrument Overview : COR

- Early confirmation of CME launch
- L1 confirms Earth-directed CME, while L1/L5 resolves ambiguity between radial distance (speed) and angular width
- Basis of CME parameterization for most CME arrival predictions

Observational parameters :

- Wavelength : 500 – 700 nm
- FoV (radial) : 2.7 – 25 Rsun
- FoV (azimuthal) : 360°
- Spatial resolution : 1.5 arcmin
- Cadence : 5 min
- Heritage : GSTP SCOPE

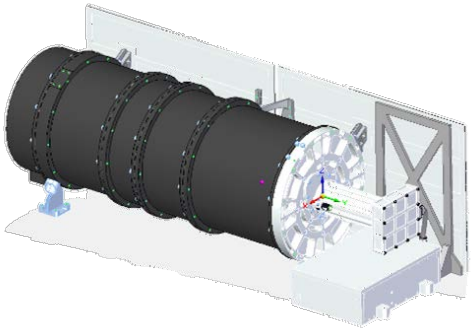

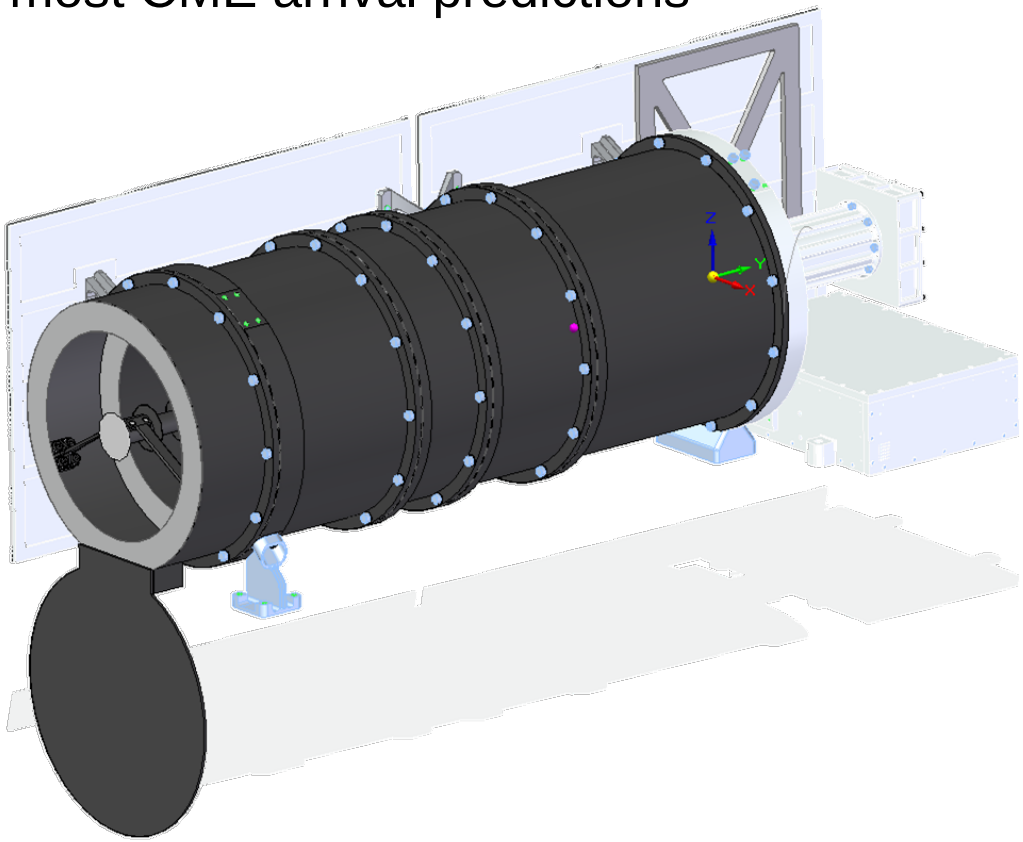

Instrument Overview : HI

- Fills under-sampled region between corona and 1 AU to mitigate deficiencies in modelling CME arrival based on near-Sun observations
- L5 provides clearer side-on view of Earth-directed CMEs out to Earth
- Provides additional information on background solar wind

Observational parameters :

- Wavelength :
  - HI-1 (inner camera) : 600 – 750 nm
  - HI-2 (outer camera) : 500 – 900 nm
- FoV (radial) : 4 – 70° elong (ecliptic)
  - HI-1 : 4 – 34 deg
  - HI-2 : 20 – 70 deg
- FoV (azimuthal) : >60° (over 5 – 55°)
- Spatial resolution :
  - HI-1 : 3.5 arcmin
  - HI-2 : 6 arcmin
- Cadence : 30 min
- Heritage : STEREO/HI

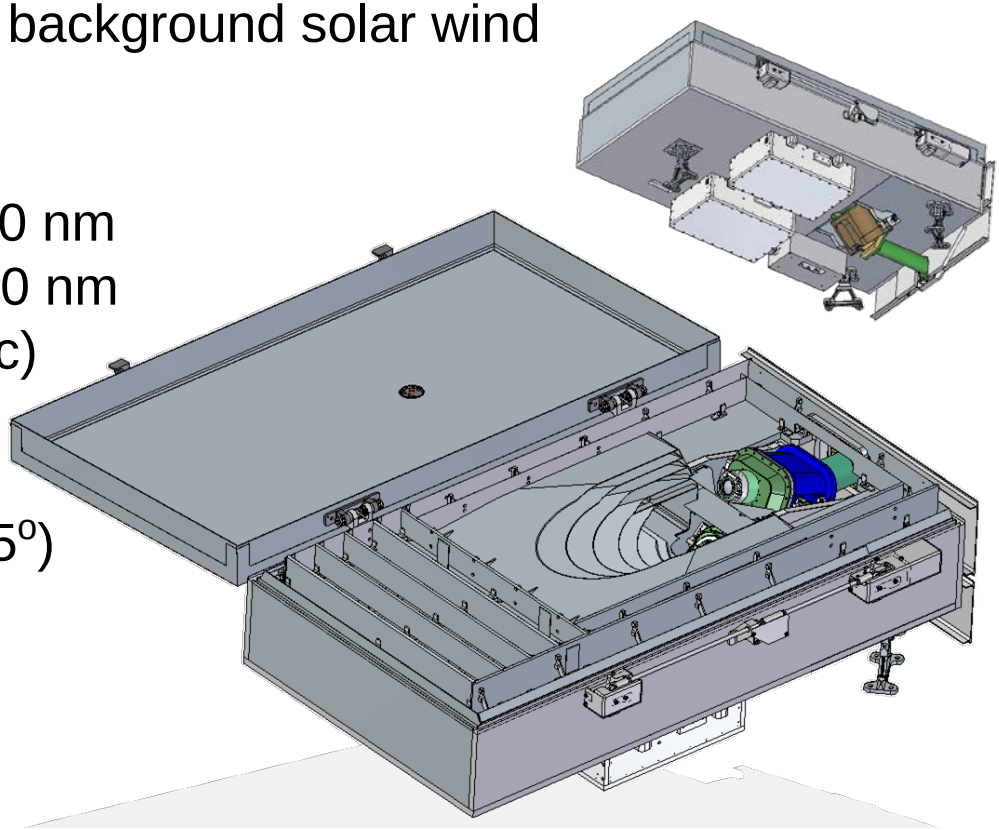

Overview : IPCU & G&F

Design based on five modules, three based on heritage (Generic) solutions (GIM, GPM, GPCM) and two application specific (Custom) modules (CIM and optional CPM).

Standard approach (built on Space Science E2E Mission Performance Simulator Reference) tailored to required high-level architecture, and modules defined. Working on the specifics for each instrument.

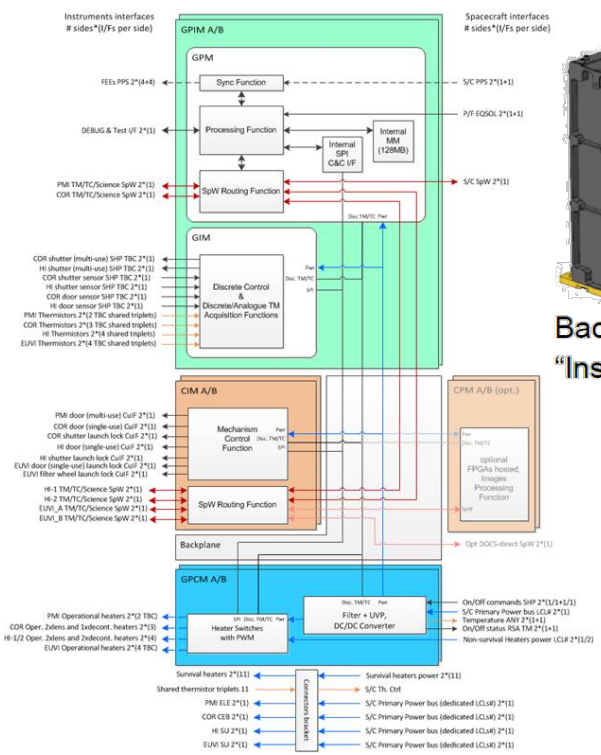

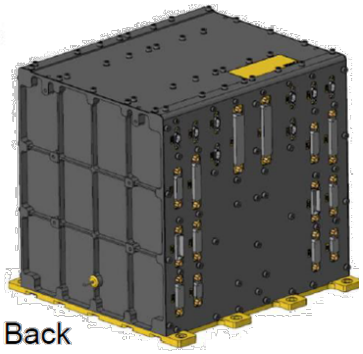

Back
"Instrument side"

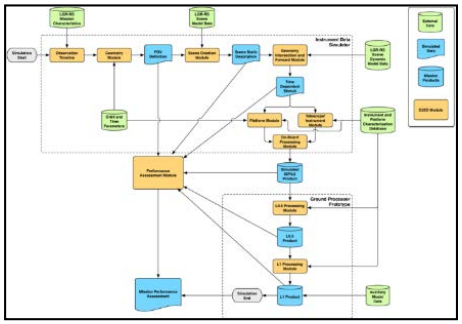

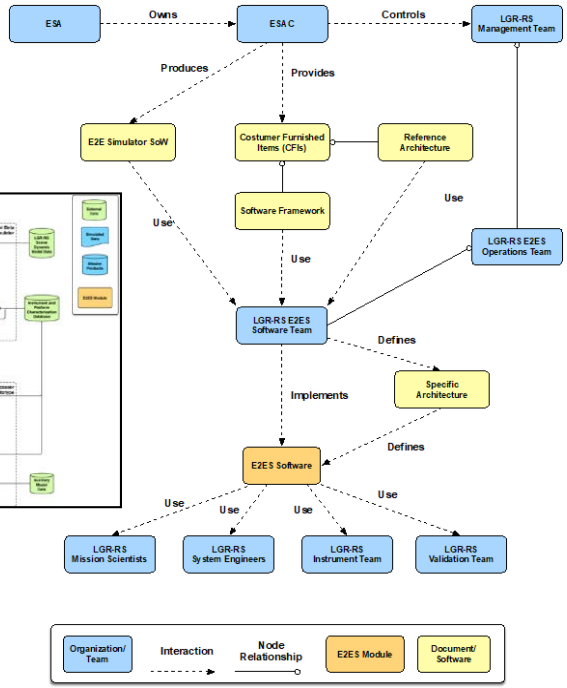

Status

- Passed PRR (preliminary requirements review)
- Currently in Phase B1
- Ministerial (November 2019)
- Critical pre-developments underway (PMI)

Thank you

Mission Timeline